NEW AXLE TUBE, AXLE RECEIVER, CAMBER DISC For Fixed Axle Plate	COLOURS IN MOTION	Ver. 1	01/01/23
		Section	1101

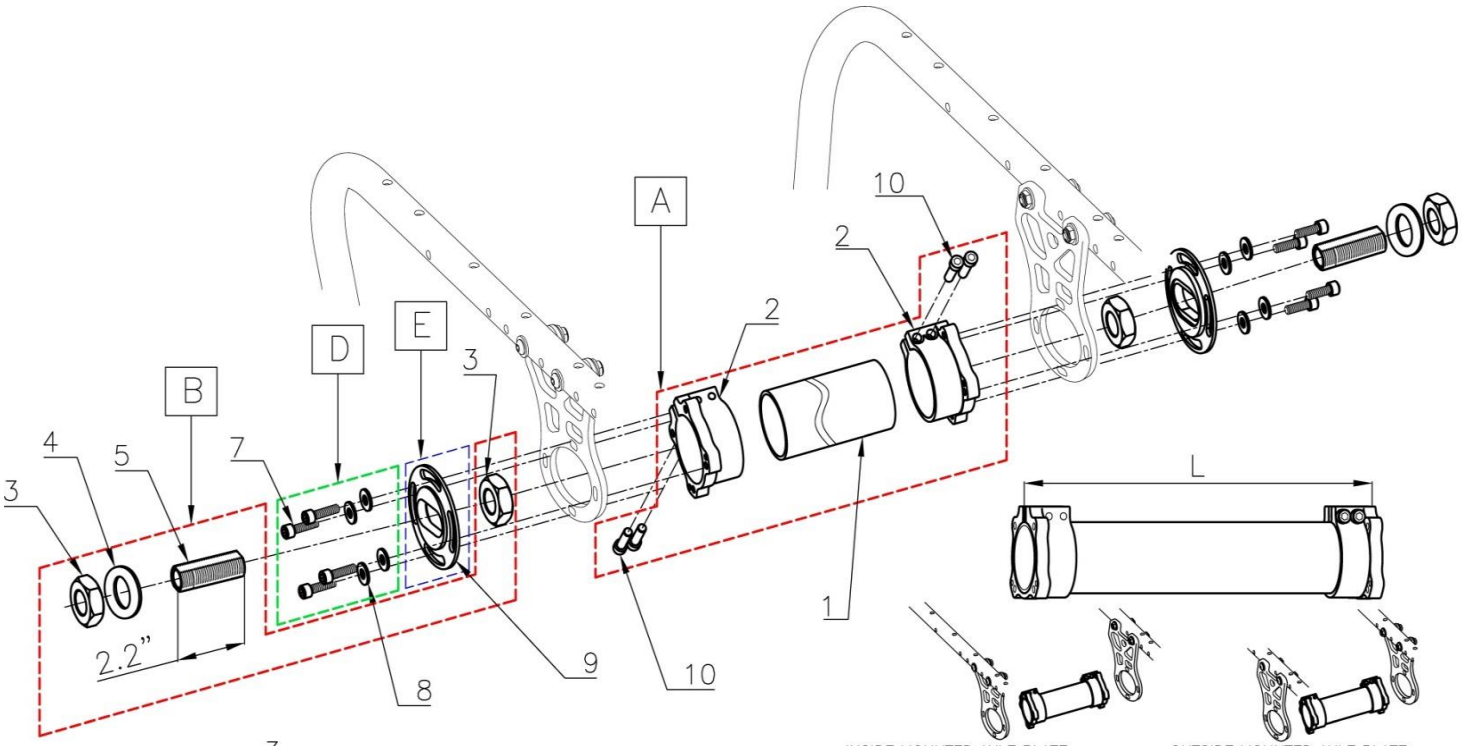

INSIDE MOUNTED AXLE PLATE

Outside to Outside Axle Clamp		
Seat Width	Axle Tube Length	L
10"	7.2"	**7.7"**
11"	8.2"	**8.7"**
12"	9.2"	**9.7"**
13"	10.2"	**10.7"**
14"	11.2"	**11.7"**
15"	12.2"	**12.7"**
16"	13.2"	**13.7"**
17"	14.2"	**14.7"**
18"	15.2"	**15.7"**
19"	16.2"	**16.7"**
20"	17.2"	**17.7"**

OUTSIDE MOUNTED AXLE PLATE

Outside to Outside Axle Clamp		
Seat Width	Axle Tube Length	L
10"	9.2"	**9.8"**
11"	10.2"	**10.8"**
12"	11.2"	**11.8"**
13"	12.2"	**12.8"**
14"	13.2"	**13.8"**
15"	14.2"	**14.8"**
16"	15.2"	**15.8"**
17"	16.2"	**16.8"**
18"	17.2"	**17.8"**
19"	18.2"	**18.8"**
20"	19.2"	**19.8"**

POS	Assy #	#	Parts #	QTY	Color	Remark	MSRP	NOTE
A	1001-01A	1	0440-320-A-BK	1	Blk	L=7.2"	per set *Choose Axle Tube Length	1set/chair
			0440-321-A-BK	1	Blk	L=8.2"		
			0440-322-A-BK	1	Blk	L=9.2"		
			0440-323-A-BK	1	Blk	L=10.2"		
			0440-324-A-BK	1	Blk	L=11.2"		
			0440-325-A-BK	1	Blk	L=12.2"		
			0440-326-A-BK	1	Blk	L=13.2"		
			0440-327-A-BK	1	Blk	L=14.2"		
			0440-328-A-BK	1	Blk	L=15.2"		
			0440-329-A-BK	1	Blk	L=16.2"		
			0440-330-A-BK	1	Blk	L=17.2"		
			0440-331-A-BK	1	Blk	L=19.2"		
			0440-332-A-BK	1	Blk	L=20.2"		
		2	0440-101-A-BK	2	Blk	Axle Clamp		
		10	0110-300	4	Sil	1/4"-20 L:1 1/4" SHCS		
B	1000-01B	3	0216-300	2	Sil	3/4"-16 Nut	per set	2sets/chair
		4	0125-300	1	Sil	3/4" Washer		
		5	0011-300	1	Sil	STD Axle Receiver		
C	1000-01C	3	2216-300	2	Sil	3/4"-16 Nut	per set	2sets/chair
		4	0125-300	1	Sil	3/4" Washer		
		6	0011-301	1	Sil	Long Axle Receiver		

POS	Assy #	#	Parts #	QTY	Color	Remark	MSRP	Note
D	1000-01D	7	0110-300	4	Sil	1/4"-20 L:1 1/4" SHCS	per set	2sets/chair
		8	0277-300	4	Sil	1/4" Washer		
E	-	9	0214-315	1	Blk	Camber 0°	1pcs	2pcs/chair
			0214-316	1	Blk	Camber 2°	1pcs	2pcs/chair
			0214-318	1	Blk	Camber 4°	1pcs	2pcs/chair
			0214-320	1	Blk	Camber 6°	1pcs	2pcs/chair